Total No. of Questions : 10]

SEAT No. :

PF12331

[Total No. of Pages : 5

[6625]-337
S.E. (Mechanical/Mechanical S.W.)
PCC 201 MEC : SOLID MECHANICS
(2024 Pattern) (Semester-III)

Time : 2½ Hours] *[Max. Marks : 70*

Instructions to the candidates:

1) ***Answer any five questions only, Q.1 or Q.2, Q.3 or Q.4, Q.5 or Q.6, Q.7 or Q.8, Q.9 or Q.10.***
2) ***Assume suitable data, if necessary.***

Q1) a) A member formed by connecting a steel bar to an aluminium bar is shown in Figure 1. Assuming that the bars are prevented from buckling sidewise, Calculate the magnitude of force P, that will cause the total length of the member to decrease by 0.25 mm. The values of elastic modulus for steel and aluminium are 210 GPa and 70 GPa respectively. **[8]**

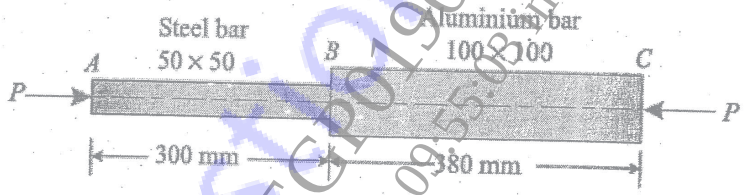

Figure 1

b) A steel bar 50 mm × 50 mm in cross-section is 1.2 m long. It is subjected to an axial pull of 200 kN. What are the changes in length, width and volume of the bar, if the value of Poisson's ratio is 0.3? Take E as 200 GPa. **[6]**

OR

Q2) a) A steel rod of cross-sectional area 800 mm^2 and two brass rods each of cross-sectional area 500 mm^2 together support a load of 25 kN as shown in Figure 2. Calculate the stresses in the rods. Take E for steel as 200 GPa and E for brass as 100 GPa, **[8]**

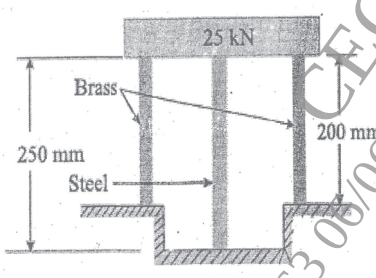

Figure 2.

P.T.O.

SPUQuestionPapers.com
CEGP019671
103.157.122.163 06/06/2026 09:55:03 in-pnq-static-163-122-157-103

b) Two parallel walls 6 m apart are stayed together by a steel rod 25 mm diameter passing through metal plates and nuts at each end. The nuts are tightened home, when the rod is at a temperature of 100°C. Determine the stress in the rod, when the temperature falls down to 60°C, if

i) the ends do not yield, and

ii) the ends yield by 1mm

Take E = 200 GPa and $\alpha = 12 \times 10 - 6/^{o}C$ **[6]**

Q3) a) The cantilever beam AB shown in the figure 3 is subjected to a uniform load acting throughout one-half of its length and a concentrated load acting at the free end. Draw the shear-force and bending-moment diagrams for this beam. **[8]**

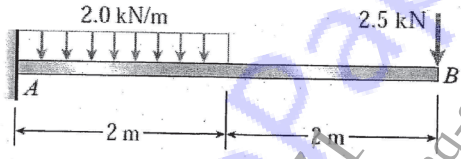

Figure 3.

b) A beam ABC with an overhang at one end supports a concentrated load of magnitude 15 kN (see figure 4). Draw the shear-force and bending-moment diagrams for this beam. **[6]**

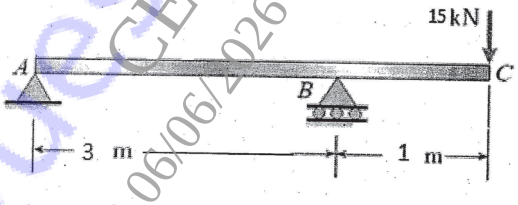

Figure 4.

OR

Q4) a) Determine the shear force and bending moment of the simple beam AB shown in the figure 5. **[8]**

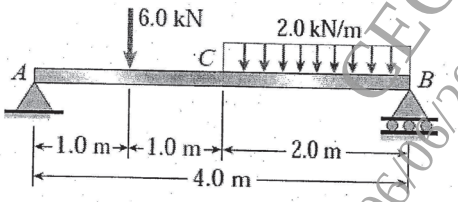

Figure 5.

SPPUQuestionPapers.com CEGP019671 103.157.122.163 06/06/2026 09:55:03 in-pnq-static-163-122-157-103

b) A simply supported beam carrying UDL as shown in Figure 6. Draw shear force and bending moment diagram. **[6]**

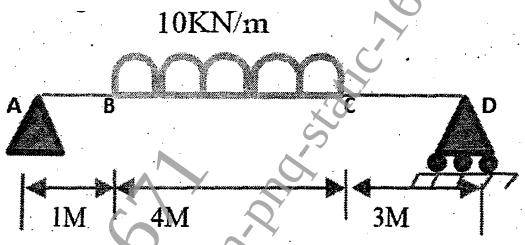

Figure 6

Q5) a) Calculate intensity of UDL that SSB of span 4m and of cross-section as shown in figure 7 can carry if permissible stresses in bending are 120 MPa in compression and 40 MPa in tension. **[8]**

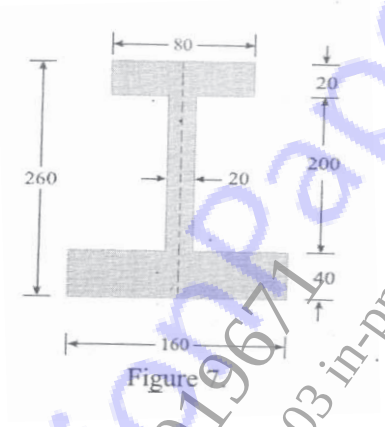

Figure 7

b) A simply supported carries a UDL of intensity 30N/mm over the entire span of 1 m long. The cross section of the Beam is T Section having the dimension as shown in figure 8, Calculate the maximum shear stress for the section of the beam. **[6]**

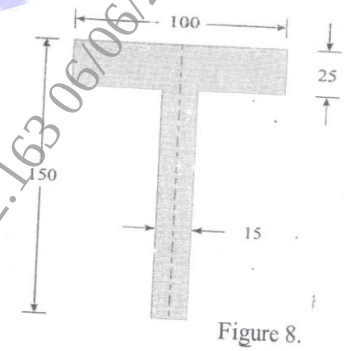

Figure 8.

OR

Q6) a) A T section of flange 180 mm × 30 mm and web 200 mm × 30 mm is simply supported at both ends. It. carries two concentrated loads of 110 kN each acting 2 m distance from each support. Span of the beam is 10m. Determine the maximum bending stress induced in the beam and draw bending stress distribution diagram and also find bending stress at the layer 110 mm from the bottom. **[8]**

SPPUQuestionPapers.com CEGP019671 103.157.122.163 06/06/2026 09:55:03 in-pnq-static-163-122-157-103

b) An I-section beam 350 mm × 200 mm has a web thickness of 12.5 mm and a flange thickness of 25 mm. It carries a shearing force of 200 kN at a section. Sketch the shear stress distribution across the section. **[6]**

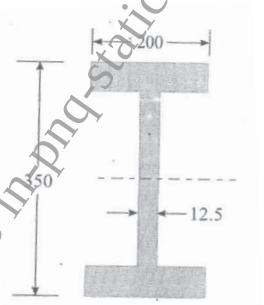

Figure 9.

Q7) a) A solid circular bar 25 m long and 120 mm diameter was found to be extended 1.2 mm under tensile load of 52 KN. Now the same bar is used as a strut. Determine critical load and safe load taking FOS = 3 with the following end conditions. **[8]**

i) Both ends are fixed

ii) One end is fixed and another end is hinged

b) A hollow shaft of 25 mm outside diameter and 20mm inside diameter is subjected to a torque of 50 Nm. Find the stress at outside and inside diameter of the shaft. **[6]**

OR

Q8) a) Determine the diameter of the solid shaft which will transmit 300KW at 250 rpm. The maximum shear stress should not exceed 30 N/mm^2 and twist should not be more than 1° in a shaft length of 2 m. **[8]**

b) A column has diameter 200 mm and length 3 m. One end is fixed another end is free. Find Eule's Crippling load, Take E=200 GPa. **[6]**

Q9) a) Write a short note on: **[6]**

i) Maximum Shear Stress Theory

ii) Maximum Distortion Energy Theory

b) A rectangular block is subjected to tensile stress of 110 N/mm^2 on one plane and a tensile stress of 60 N/mm^2 on a plane at right angles, together with shear stresses of 70 N/mm^2 on the faces. Find the following terms: **[8]**

i) The magnitude of principal stresses

ii) The magnitude of greatest shear stress

iii) The location of principle plane

OR

SPPUQuestionPapers.com CEGP019671 103.157.122.163 06/06/2026 09:55:03 in-pnq-static-163-122-157-103

Q10)a) The planes are stressed as shown in figure 10, determine the principal stresses and its orientation. Determine normal and tangential stresses on oblique, plane inclined at 30° with the plane of 60 MPa. Also determine the maximum shear stress and plane on which it acts using Mohr's Circle. **[8]**

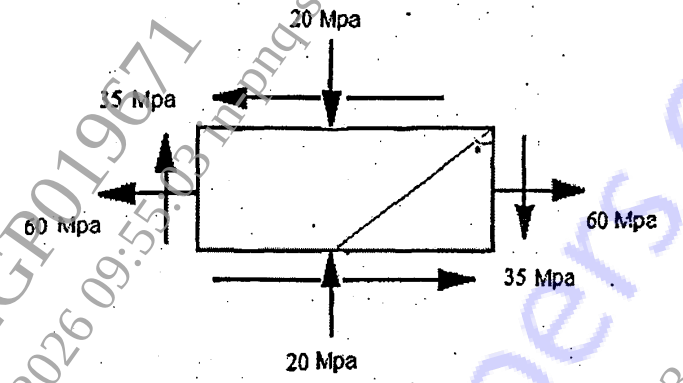

Figure 10.

b) At a point in a strained material, there are two mutually perpendicular stresses of 80 MPa and 30 MPa, both tensile. They are accompanied by a shear stress of 20 MPa as shown in figure 11. Determine principal plane and principal stresses using analytical method. **[6]**

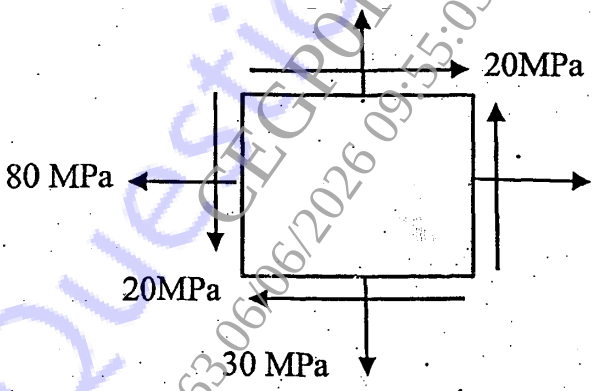

Figure 11

SPPUQuestionPapers.com
CEGP019671
103.157.122.163 06/06/2026 09:55:03 in-pnq-static-163-122-157-103