Total No. of Questions : 10]

SEAT No. :

PE5746

[Total No. of Pages : 5

[6582]-296

S.E. (Mechanical/Mechanical S.W.)

PCC 201 MEC : SOLID MECHANICS

(2024 Pattern) (Semester - III)

Time : 2½ Hours] *[Max. Marks : 70*

Instructions to the candidates:

1) ***Answer any five questions only (Que.1 or 2, Que.3 or 4, Que.5 or 6, Que.7 or 8, Que.9 or 10).***
2) ***Assume suitable data if necessary.***

Q1) a) Find the value of load P that will not exceed maximum overall deformation of 2mm, or a stress in steel of 140MPa, that in Aluminum 80MPa, and in brass 120MPa. E_s = 200GPa, E_{Al} = 70GPa, E_{Br} = 83GPa **[8]**

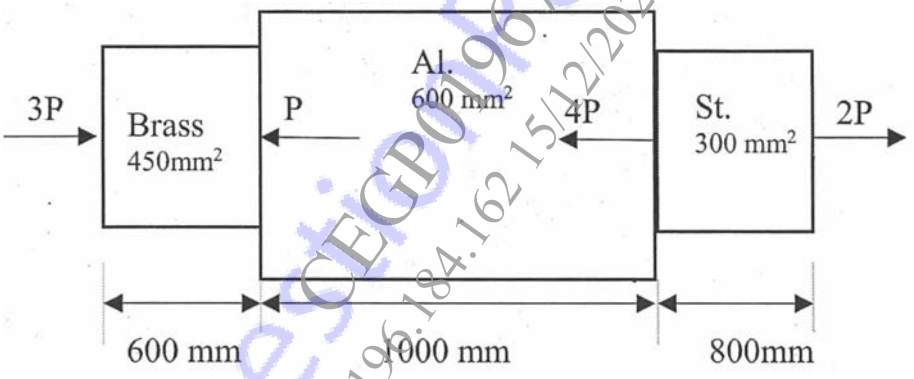

b) A flat plate is fastened to a gusset plate using four rivets. The plate is subjected to a normal stress of 120 MPa caused by a load P. Determine an appropriate rivet diameter if the allowable shear stress in each rivet is 90 MPa. The reduction in plate strength due to rivet holes may be neglected. Thickness of flat plate is 15 mm. **[6]**

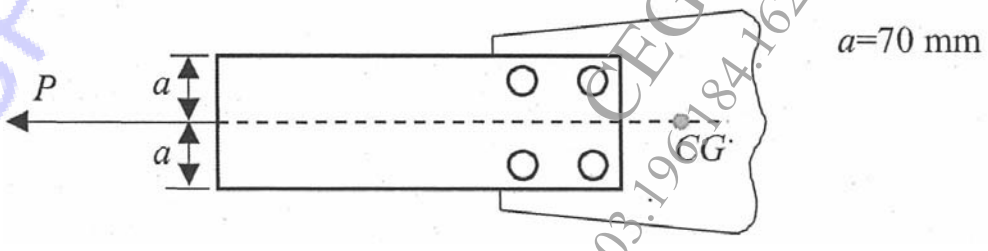

OR

P.T.O.

SPPUQuestionPapers.com
CEGP019671
103.196.184.162 15/12/2025 09:32:12

Q2) a) A 16m long steel rail is laid at a temperature of 25°C, and the maximum expected temperature is 48 °C. **[8]**

i) Determine the minimum clearance that should be left between two rails to prevent the formation of thermal stresses.

ii) Compute the thermal stresses in the rails under the following conditions:

a) When no expansion joint is used, and

b) When a 2 mm expansion gap is provided.

[Given: $E = 2.1\times10^{5}N/mm^{2}$, $\alpha = 12\times10^{-6}$ /°C]

b) Figure shows the aluminum bar inserted in a steel tube. The rod and tube are fixed together at 150°C. Calculate the stresses induced in the rod and in the tube when temperature falls to 30°C. Take $\alpha_s = 12\times10^{-6}$/°C, $\alpha_A = 23\times10^{-6}$/°C, $E_s = 210GPa$, $E_A = 70GPa$. **[6]**

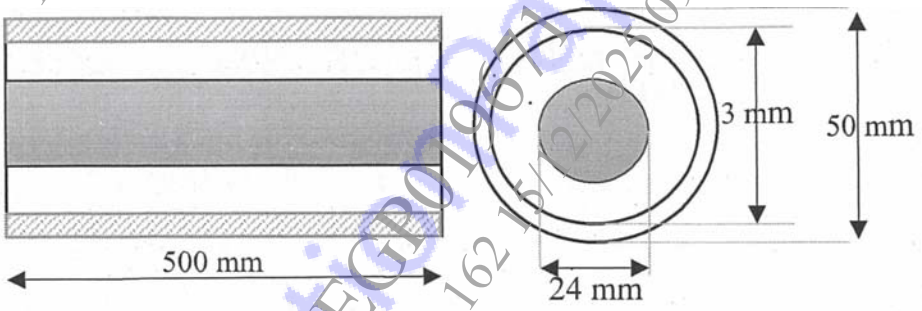

Q3) a) A simply supported beam carrying UDL as shown in Figure. Draw shear force and bending moment diagram. **[8]**

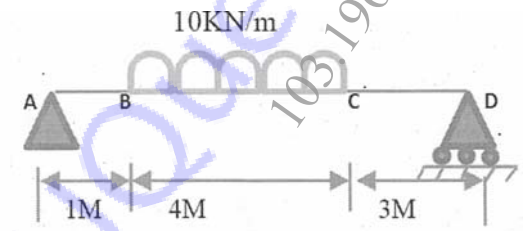

b) Draw shear force and bending moment diagrams for a cantilever beam of span 2 m carrying loads as shown in Figure. **[6]**

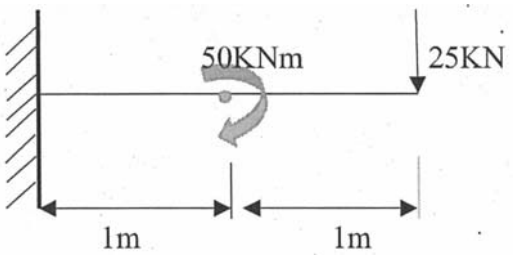

OR

Q4) a) A simple supported beam AB of span 10m carries a concentrated loads of 4kN, 10kN and 7kN at distance of 1.5m, 4m and 6m from left support, Draw Shear Force and Bending Moment diagram. **[8]**

b) A cantilever beam of length 2m carries point loads as showi in fig. Draw shear force and bending moments diagrams for the cantilever. **[6]**

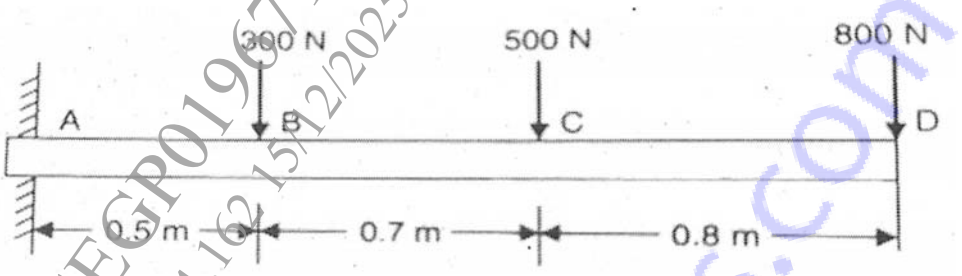

Q5) a) As shown in figure, allowable stress in bending is 50MPa. Find the intensity of UDL the beam can carry over simply supported span of 4m. **[8]**

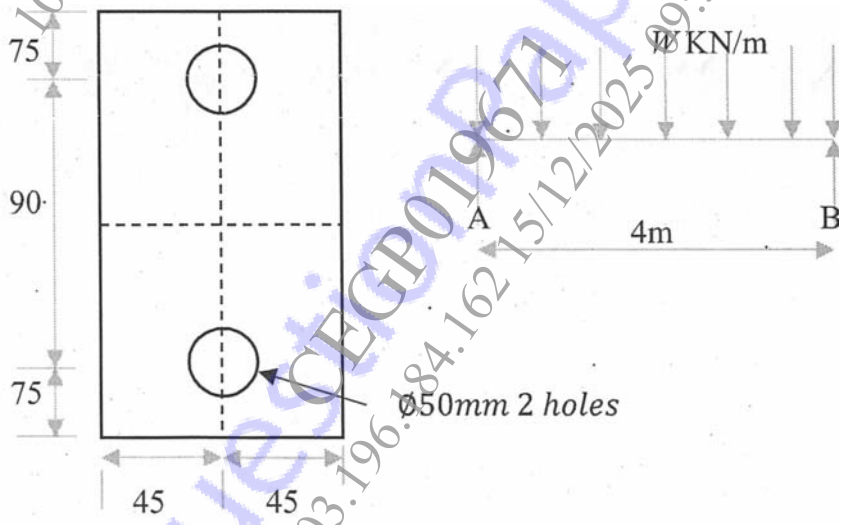

b) For the beam shown in figure, find the share stress at 50 mm away from neutral axis, under a UDL of 10KN/m over a span of 4m. **[6]**

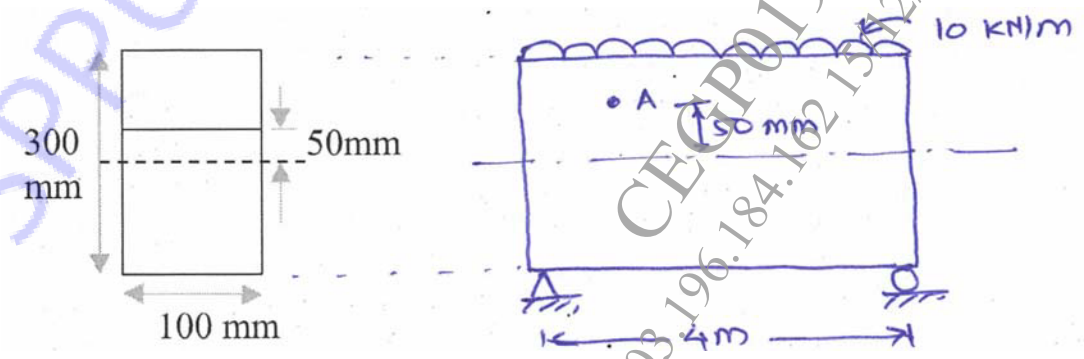

OR

SPPUQuestionPapers.com CEGP019671 103.196.184.162 15/12/2025 09:32:12

Q6) a) For the shown c/s of beam determine moment of Inertia, maximum tensile stress, and compressive stress under UDL of 2 KN/m over a span of 3m for cantilever beam. **[8]**

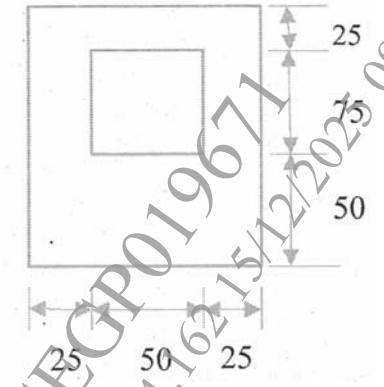

b) Find moment of resistance of the beam section shown in figure when permissible stress in bending is 100MPa **[6]**

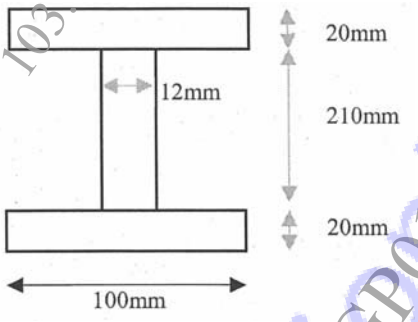

Q7) a) A solid circular bar 25 m long and 120 mm is used as a MS column. Determine critical load and safe load taking FOS = 3 with following end conditions i) Both ends fixed and ii) one end fixed and other end hinged. Assume Modulus of Elasticity 210GPa. **[8]**

b) A hollow shaft of 150 mm inner diameter is transmitting power of 200 Kw at 1400 RPM. Determine the angle of twist and torsional shear stress if modulus of rigidity is 100 GPa of a shaft material. **[6]**

OR

Q8) a) A compound shaft consisting of a steel segment and an aluminum segment is acted upon by two torques as shown in Fig. Determine the maximum, permissible value of T subject to the following conditions: τ_{st} = 83 MPa, τ_{Al} = 55 MPa, and the angle of rotation of the free end is limited to 6°. For steel, G = 83 GPa and for aluminum, G = 28 GPa. **[8]**

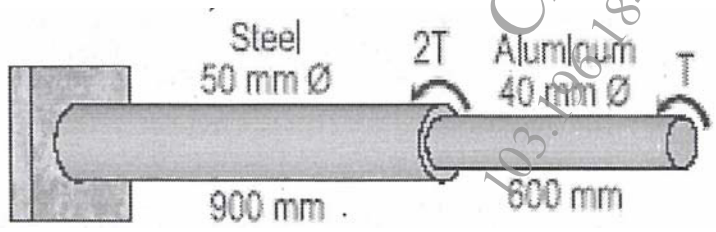

SPPUQuestionPapers.com
CEGP019671
103.196.184.162 15/12/2025 09:32:12

b) A hollow circular shaft of 150mm external diameter, thickness of metal 20mm is rotating at 200rpm. The angle of twist on 3m length was found to be 0.7°. find the power transmitted. **[6]**

Q9) a) State of stress for an element of unit thickness is shown in Figure. Find the normal stress and shear stress that must act on an inclined dotted plane to keep the element in equilibrium. **[8]**

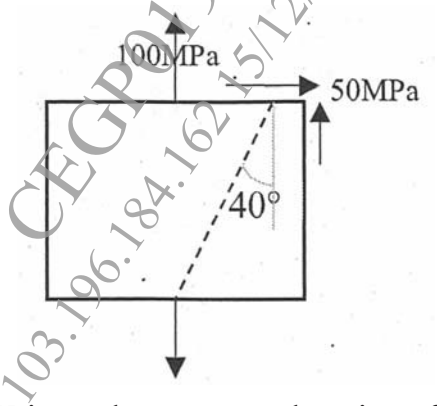

b) Write a short not on theories of elastic failure, types and application. **[6]**

OR

Q10) a) For the given state of plane stress, Construct Mohr's circle with proper scale on graph paper. **[8]**

i) Determine principal stresses and principal plane

ii) Determine maximum shear stress and shear plane

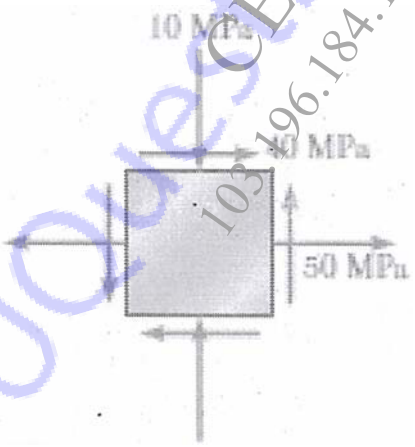

b) Explain **[6]**

i) Maximum Shear Stress Theory

ii) Distortion energy theory

✪ ✪ ✪

SPPUQuestionPapers.com
CEGP019671 103.196.184.162 15/12/2025 09:32:12